Trio GENERATOR

Perkins

MADE IN TURKEY

International Organization for Standardization ISO 14001:2015

ISO 9001

OUTPUT VALUES

Standby Power	Voltage	230/400
Standby Power	kVA	250
Standby Power	kW	200
Standby Power	Amper	360
Prime Power	Voltage	230/400
Prime Power	kVA	225

Prime Power	kW	180
Prime Power	Amper	324

DIESEL ENGINE

Brand	PERKINS
Model	1206A-E70TTAG2
Max. Total Output Pow. (kWm/hp)	226.1 / 303.1
Cylinder Displacement (lt)	7,01
Cylinder Orientation	6 Single Line
Bore x Stroke(mm*mm)	105*135
Compression Ratio	15.8:1
Governor Type	ECM
Rotation	1500 RPM
Aspiration System	Natural
Injection	Direct
Cooling System	Water Cooled
Electrical System(V DC)	12
Oil Capacity (lt)	16
Engine Coolant Capacity (lt)	21
Fuel Cons. %50 (lt/h)	25
Fuel Cons. %75 (lt/h)	38
Fuel Cons. %100 (lt/h)	51

ALTERNATOR

Standby Power (kVa/kw)	250/200
Prime Power (kVa/kw)	225/180
Brand	LEROY SOMER
Output Voltage (V)	231/400
Frequency (Hz)	50
Stationary Vol. Regulation(±)	0,01
Short Circuit Current	%300 (10 sec)
Insulation	H
Protection	IP23
E ciency (%)	92
Overloading	110% for 1 hour
Power Factor (cos Q=0.8)	0,8
Tot. Harmonic Dist. Rate	<1 %
Connection Type	Star
Number of Pole	4
Number of Bearing	Single

DIMENSIONS & WEIGHT

Without Canopy	Width	1100 mm
Without Canopy	Length	2500 mm
Without Canopy	High	1650 mm
Without Canopy	Weight	2750 kg
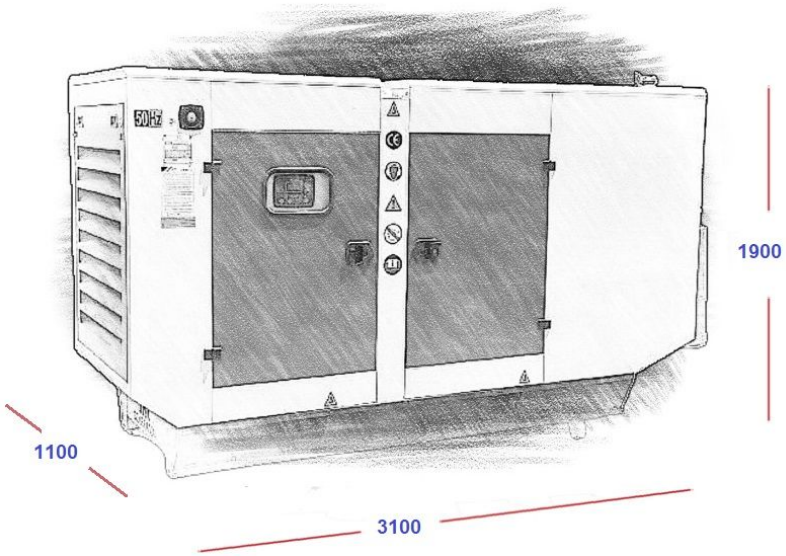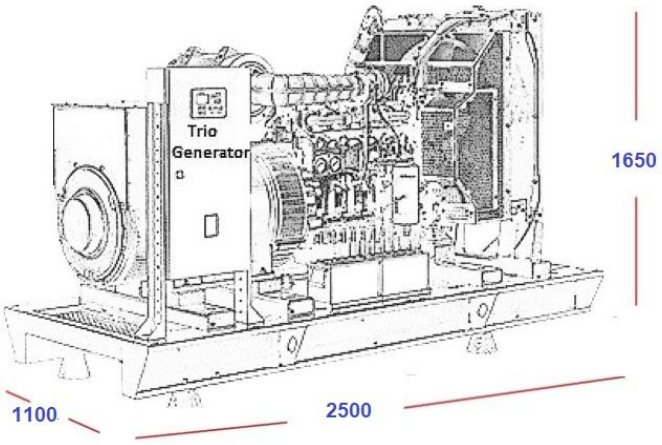
Without Canopy	Fuel Tank Capacity	280 lt
With Canopy	Width	1100 mm
With Canopy	Length	3100 mm
With Canopy	High	1900 mm
With Canopy	Weight	3010 kg
With Canopy	Fuel Tank Capacity	280 lt